Evaluation of Receiver-Amplifier Architectures for Improved Lidar Signal Quality

Christopher R. Valenta, Ph.D.
Group Lead, Opto-Electrical Branch
Electro-Optical Systems Innovation Division
16 June 2015

Electro-Optical Systems Laboratory
Georgia Tech Research Institute

Agenda

- Electo-optical front ends
- State-of-the-art transimpedance amplifiers (TIAs)
- Theoretical performance limits
- TIA design for bathymetric lidar applications
- Example measurements
- Detectors
- Opto-mechanical integration

Mapping Lidar Block Diagram

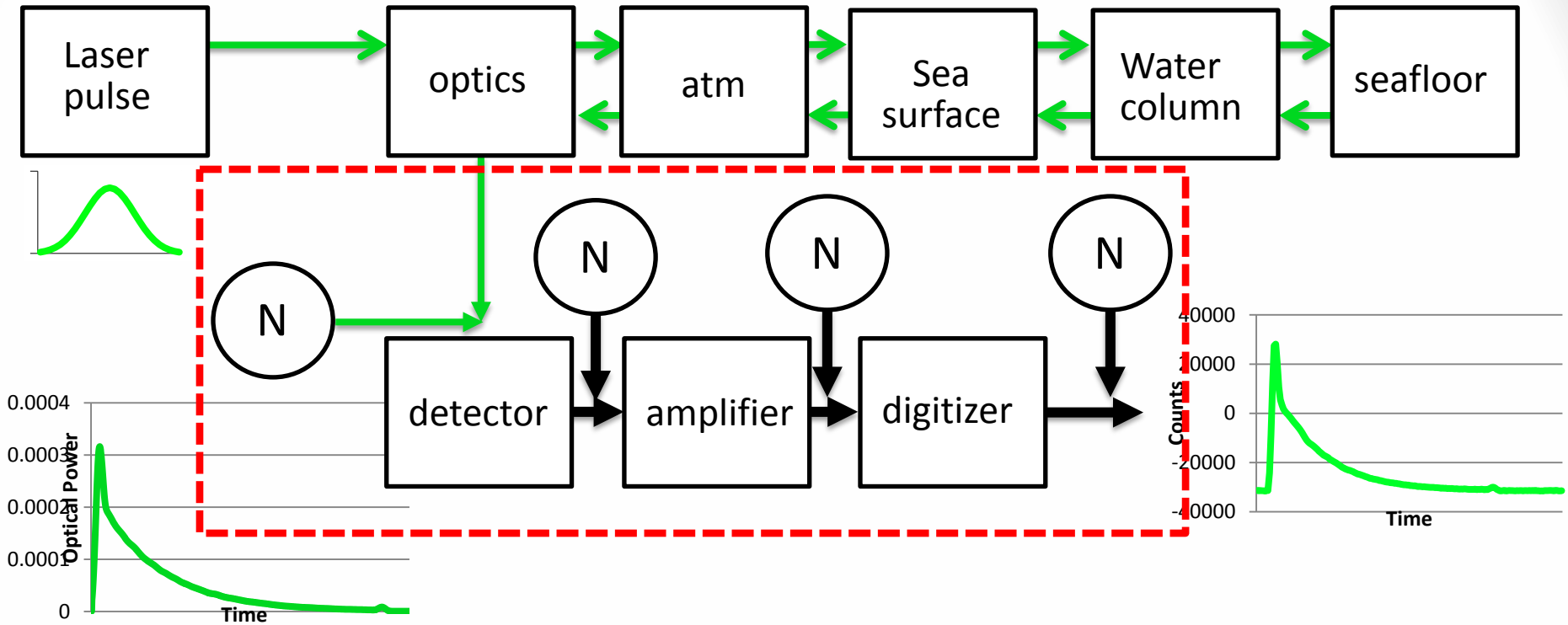

$$S_{\max} = P_0 \cdot \frac{\rho_{532}}{\pi} \Sigma \frac{e^{-2l_A}}{(Hn+D)^2} \eta (1-\rho^{fr})^2 e^{-2KD} F(D,H,FOV,b_f,m) \cdot \frac{1}{M^S}$$

Tuell, G., Park, J., Aitken, J., Ramnath,V., Feygels, V., Guenther, G., and Kopilevich, Y., 2005, "SHOALS Enabled Benthic Mapping," *Algorithms and Technologies for Multispectral, Hyperspectral, and Ultraspectral Imagery XI*, edited by Sylvia S. Shen, Paul E. Lewis, Proceedings of SPIE Vol. 5806.

Radiometric Simulator

$$P_{rec} = \underbrace{\frac{P_o \eta \beta_\pi \left(1-\rho^{fr}\right)^2 e^{-2\tau_a} A_{rec} cos^2(\theta)}{\pi (H n_w)^2}}_{S_o} \underbrace{\frac{e^{-2K_d h sec(\varphi)}}{\left(1+\frac{h sec(\varphi)}{n_w H sec(\theta)}\right)^2}}_{Z(H,h)} F(h, FOV)$$

P_o	is the peak power transmitted
η	is the optical efficiency of the receiving optics
β_π	is the backscattering coefficient
ρ	is the seafloor reflectance
ρ^{fr}	is the Fresnel reflectance at the air-water boundary
τ_a	is the optical thickness of the air
A_{rec}	is the aperture area of the receiver optics
θ	is the off-nadir transmit angle

H	is the aircraft altitude
n_w	is the refractive index of water
K_d	is the diffuse attenuation coefficient or, $a + b_b$
a	is the water's absorption coefficient
b_b	is the water's backward scattering coefficient
h	is the true (current) water depth
φ	is the refracted beam angle in water
θ	is the off-nadir transmit angle

Carr, D. and Tuell, G., "Estimating field-of-view loss in Bathymetric Lidar: Application to Large-Scale Simulations," *Applied Optics*, Vol. 53, Issue 21, pp. 4716 – 4721, 2014.

Desired Receiver Characteristics

- High dynamic range
- High sensitivity
- High bandwidth
- Low noise

- All pieces of the receive chain must be designed in tandem to accomplish these requirements!

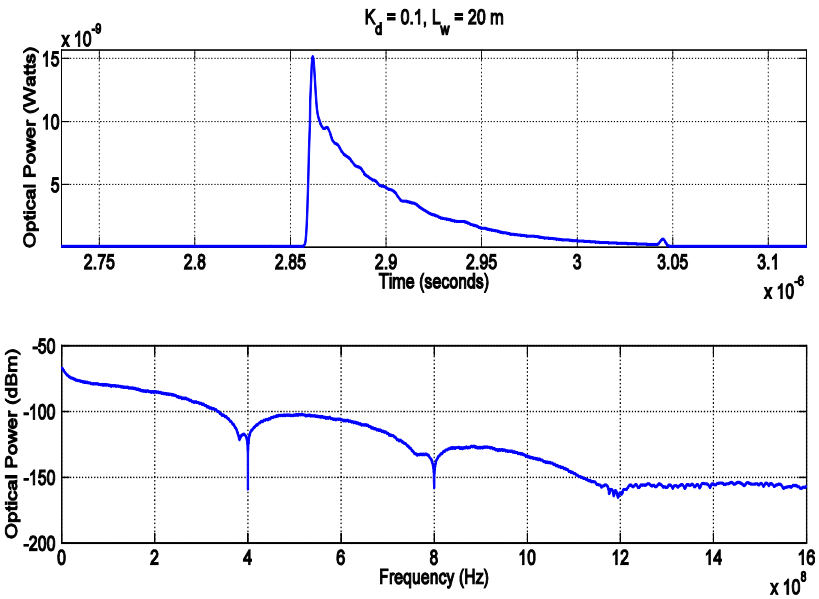

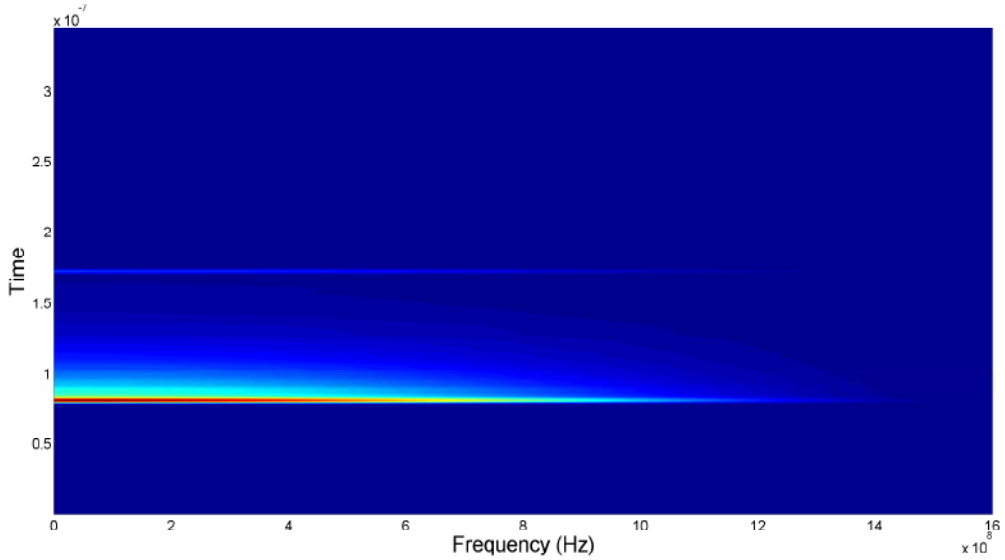

Detector

- Photomultiplier tubes (PMTs) typically used for sensitivity and high gain
- Adds dark current and after pulsing
- Bandlimited
- Typically current limited (Dynamic range)
  - Linearity concerns (or advantages)
  - High currents affect noise performance and lifetime
  - Can operate linear or logarithmically
- Time gate detectors to increase resolution

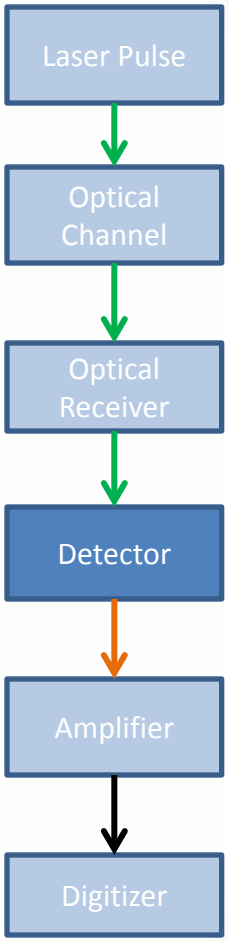

Photomultiplier Noise

- For high SNR, we need…
  - High quantum efficiency η
  - Low noise factor Γ
  - Low bandwidth B
  - Low dark current
  - High PMT current gain G
- Design for
  - Afterpulses
  - Impedance mismatch
  - Electromagnetic Interference (EMI)
- Dependent on choice of PMT, resolution, and gain
- PMTs vary unit to unit

$$SNR_{power} \approx \frac{\eta P_S^2}{2\Gamma h\nu B\left(P_S + P_B + \frac{h\nu \overline{I_d}}{\eta q G}\right)}$$

Shot noise contribution

Kingston, R.H., "Detection of Optical and Infrared Radiation," Springer-Verlag, New York, NY, 1978.

Sensitivity Vs Range Resolution For Bathymetric Lidar

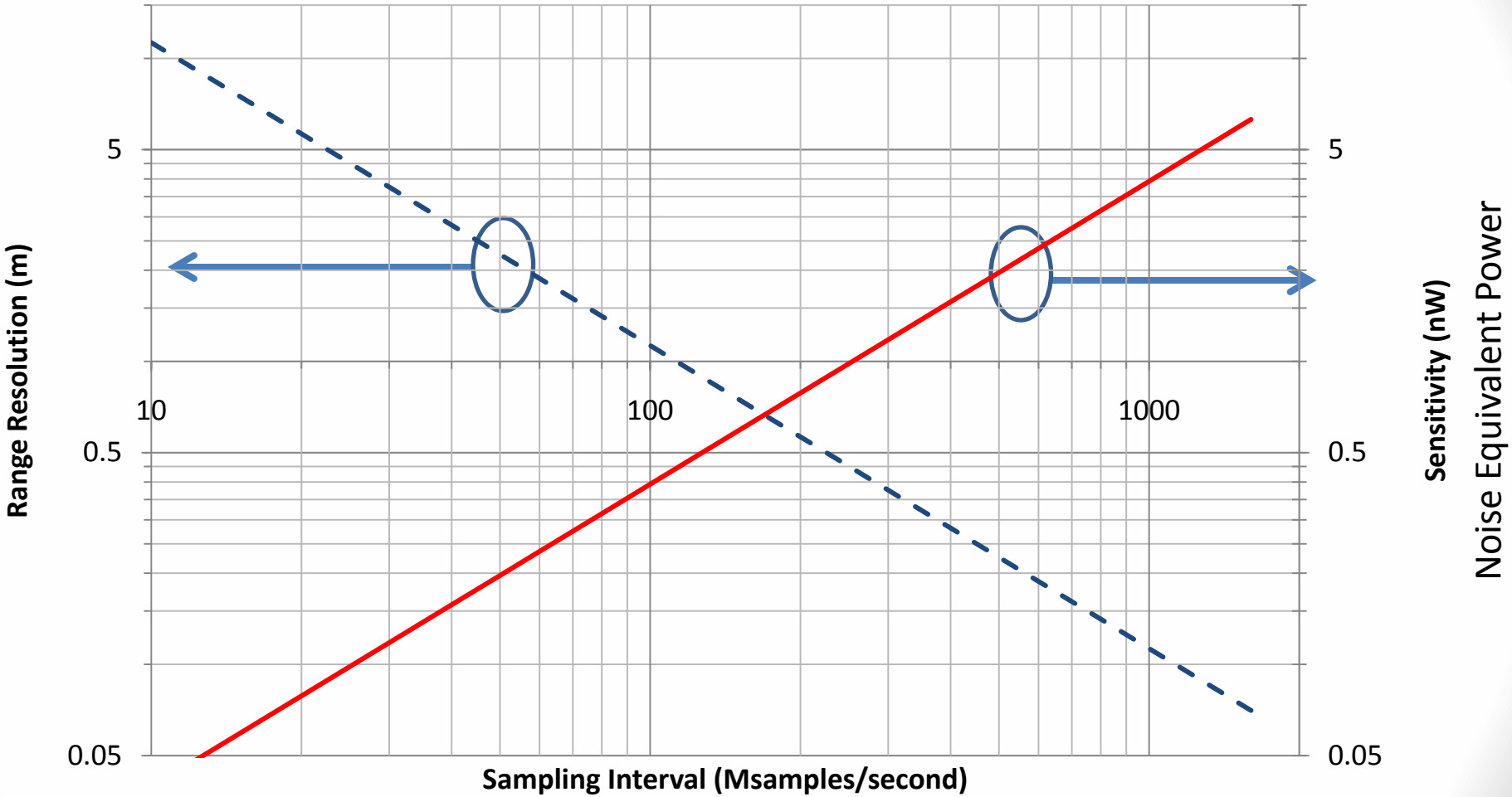

Only shot noise considered

Assumes signal limited case

Amplifier

- Fills full-scale range of ADC
  - Transimpedance or Voltage amplifiers
- Noise contribution from amplifier and feedback resistor
- Bandlimited (AC or DC coupled)
- Operate linear or logarithmically
- Non-linear effects
- Minimum distance between PMT and TIA
  - Decreases susceptibility to EMI
  - Improves impedance matching

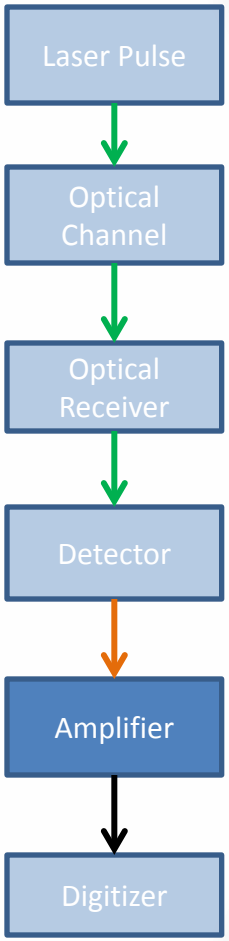

State-of-the-art TIA Noise Performance

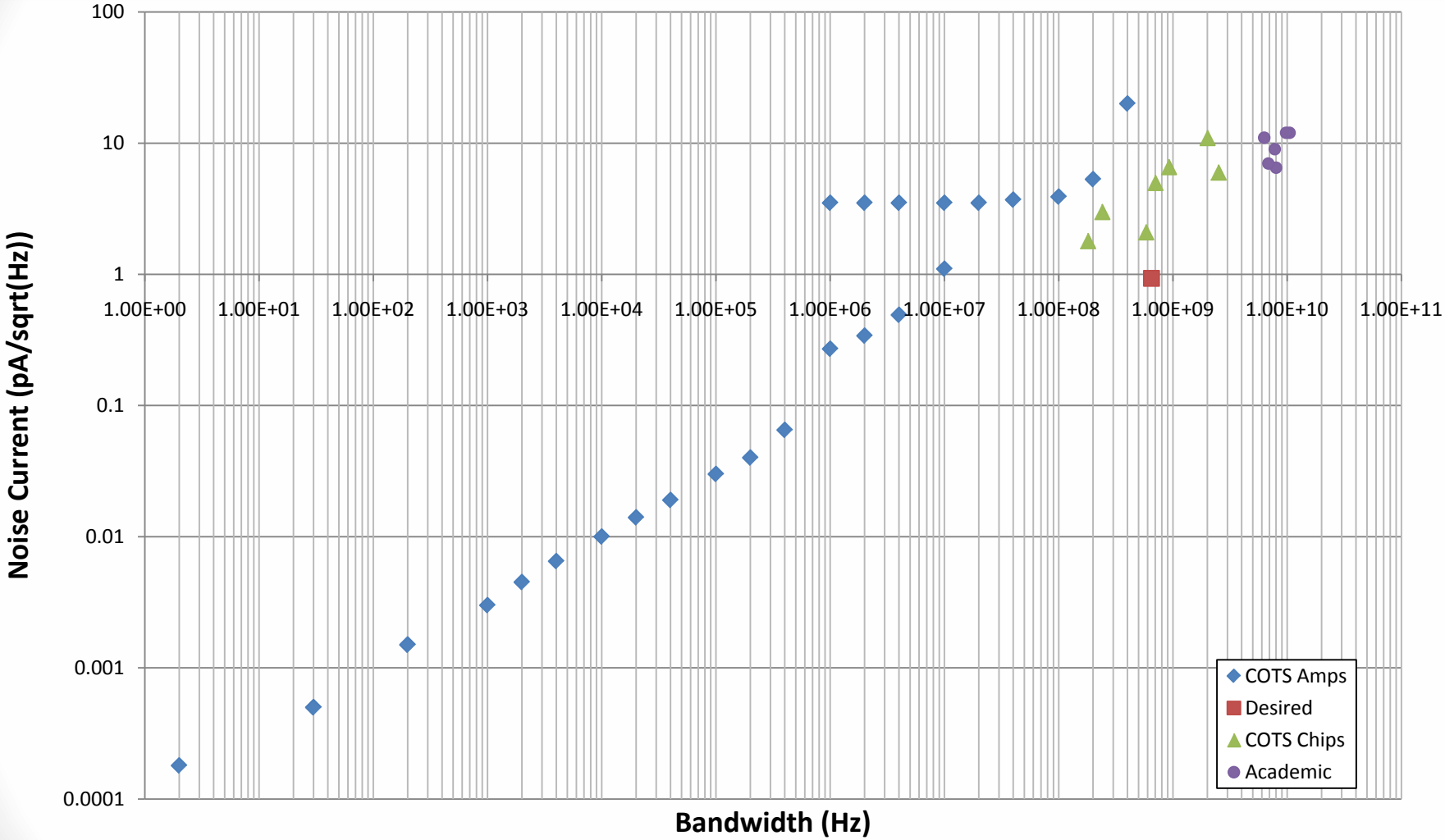

State-of-the-art TIA Gain

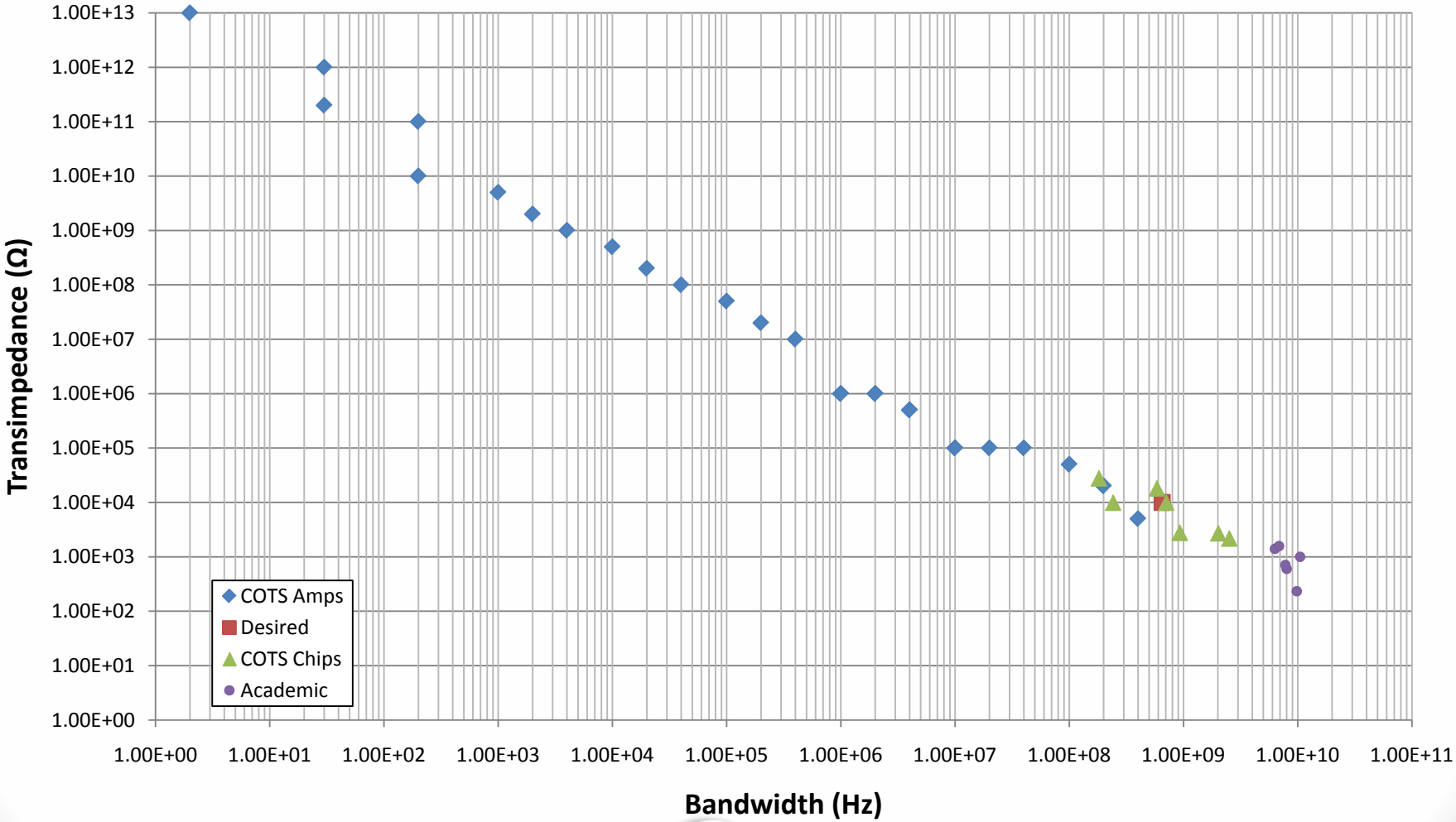

TIA Theoretical Maximums

- Bandwidth limited by parasitics
  - R9880u-20 has 9 pF output capacitance
  - Telecommunications photodiodes have ~100 fF

$$\text{BW}=\frac{1}{2\pi R_{in}(C_D+C_{in})}=\frac{A_{v0}+1}{2\pi R_f(C_D+C_{in})}$$

- Can increase BW by
  - Decreasing R_f
    - Reduces Z_T
  - Decreasing C_D, C_{in}
    - C_D fixed by sensor
    - C_{in} fixed by technology/layout
  - Increasing A_{vo}
    - A_{vo} fixed by op-amp

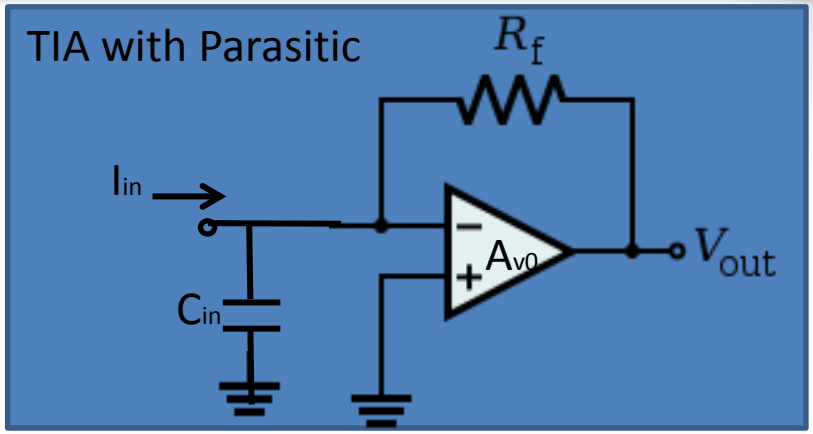

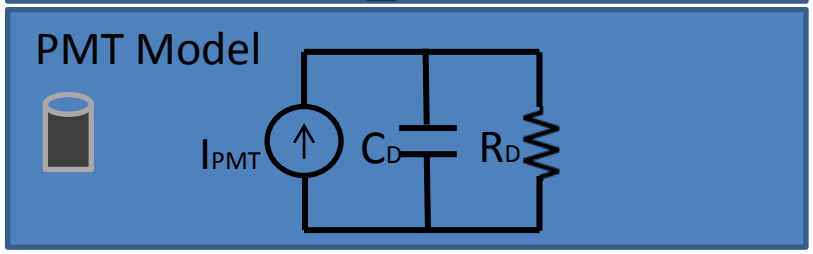

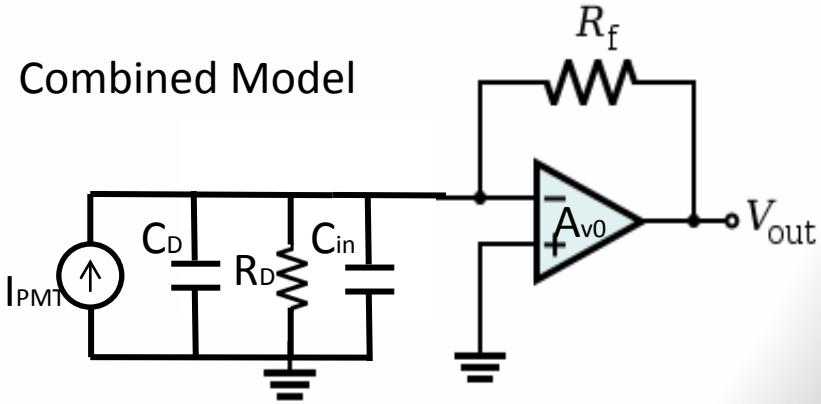

Digitizer

- Bandlimited
  - Actual bandwidth
  - Sampling rate
- Adds noise → ENOB
  - Quantization and thermal
- Non-linear effects (intentional and unintentional)
- Can stack channels to increase resolution
- Data processing architecture

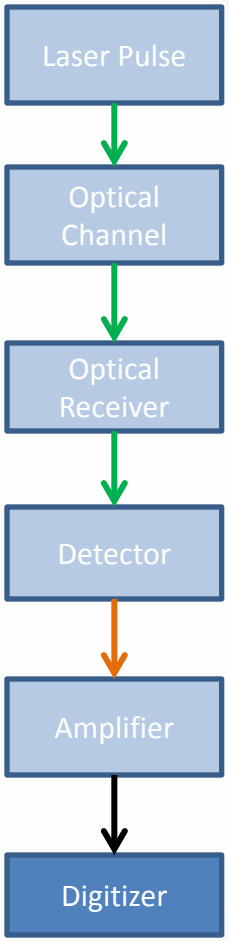

GTRI Research in EO Receivers

- Custom-developed PMT bias-ing boards
- Green, single photon-sensitive SiPM array
- Integrated transimpedance amplifier
- Opto-mechanical housing
- Integration with real-time computing system

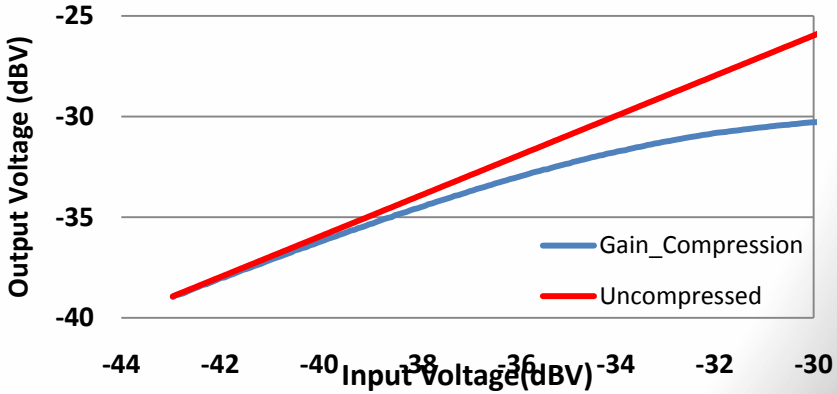

GTRI PMT Bias Board

- Hamamatsu R9880 PMT
- Active or passive PMT biasing
- Integration with TIA on same board
  - Increases bandwidth
  - Reduces EMI susceptibility
- Tightly coupled with opto-mechanical design

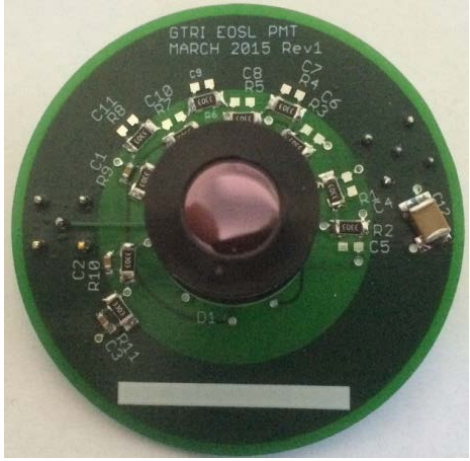

Opto-mechanical Design

- Enclosure contains PMT and TIA
- Environmentally regulated to decrease noise and increase lifetime

Integration with Real-time Data System

- Receivers mounted immediately adjacent to ADC in data system
- 4 channel system shown
- Minimizes EMI
- Small form factor

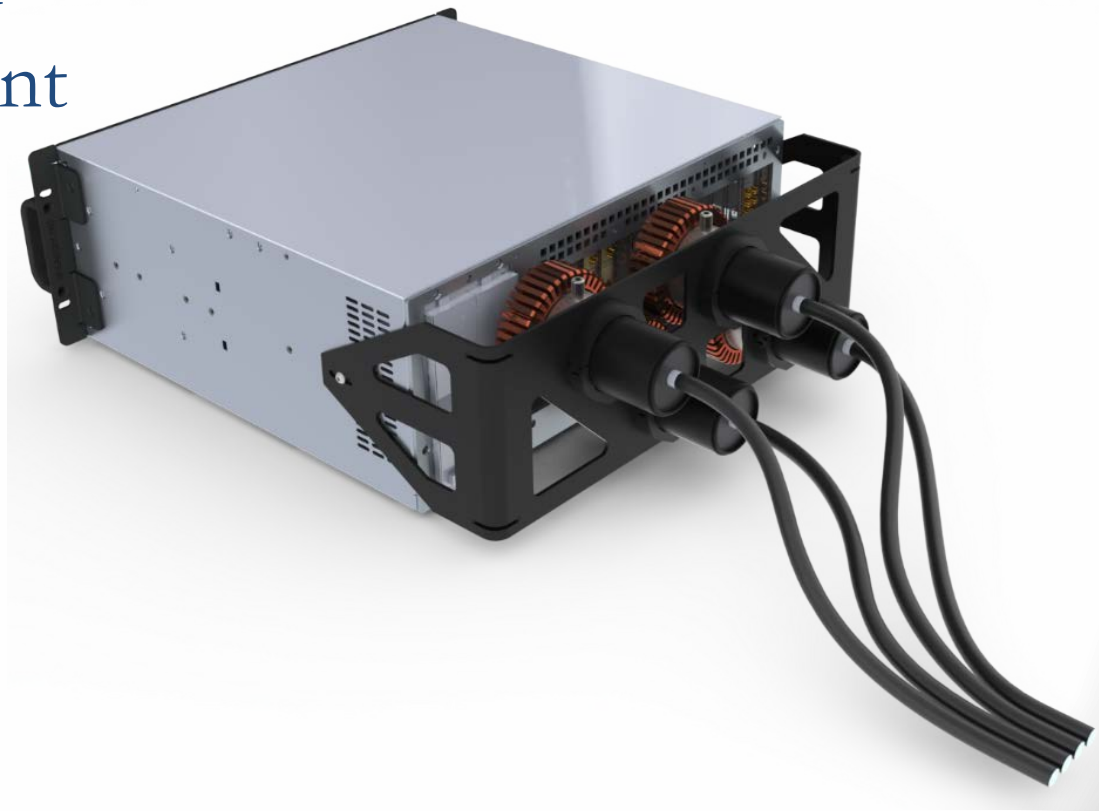

Low Light, Green Array Detection

- Silicon Photomultiplier
  - 300 ps risetime
  - 30 V bias
  - 1E6 gain
- 532nm single-photon sensitive
- 8x8 array of 1mm pixels
  - 540 micro-cells/pixel
- High Resolution image
- Alternative to PMTs

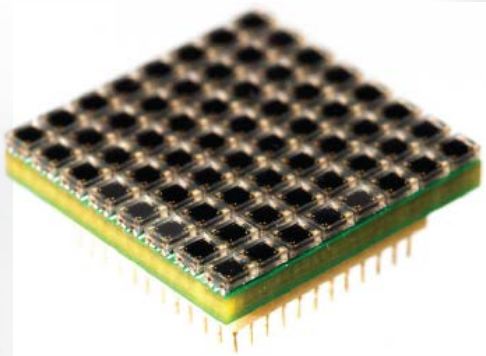

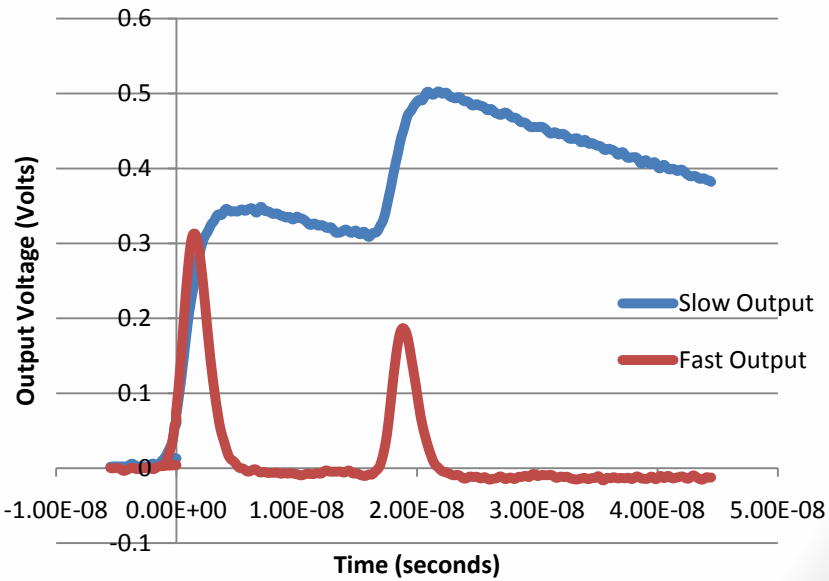

Application of SiPM Array

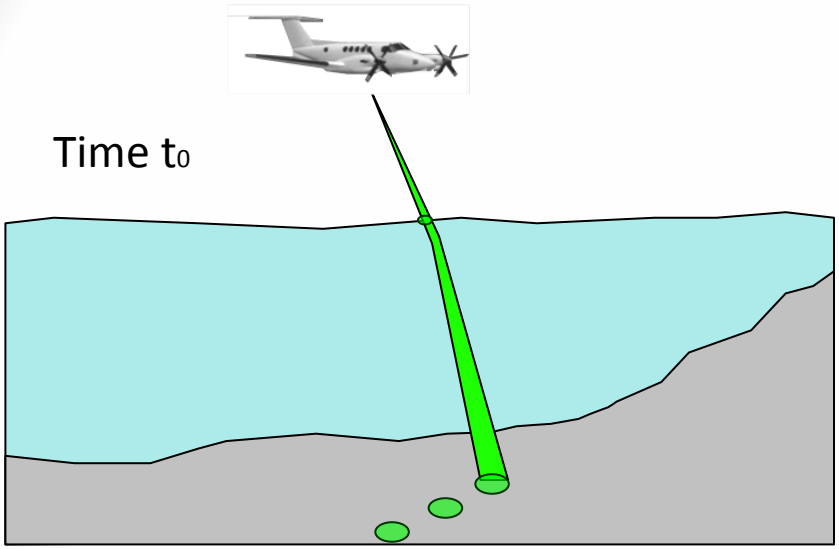

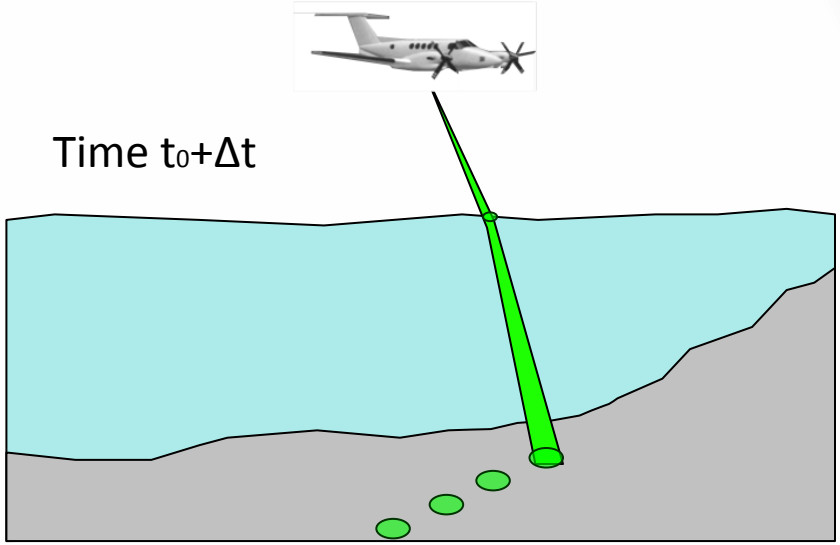

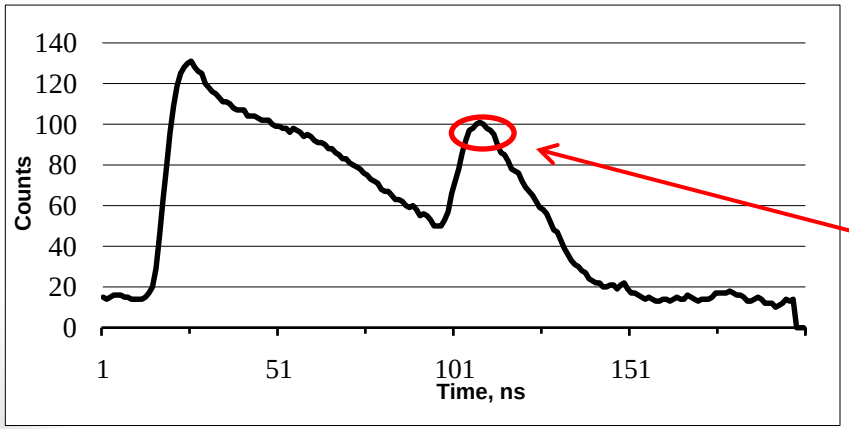

Actual SHOALS Waveform

- Gate SiPM array using sea floor return from PMT on previous pulse
- High resolution sea floor imagery!

Transimpedance Amplifiers

- Bandwidth match PMT to TIA to ADC
- Ensure linearity (or compensate)
- Max PMT output current should fill ADC full-scale range

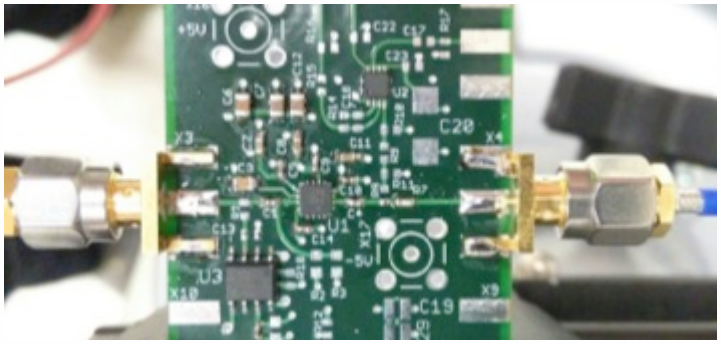

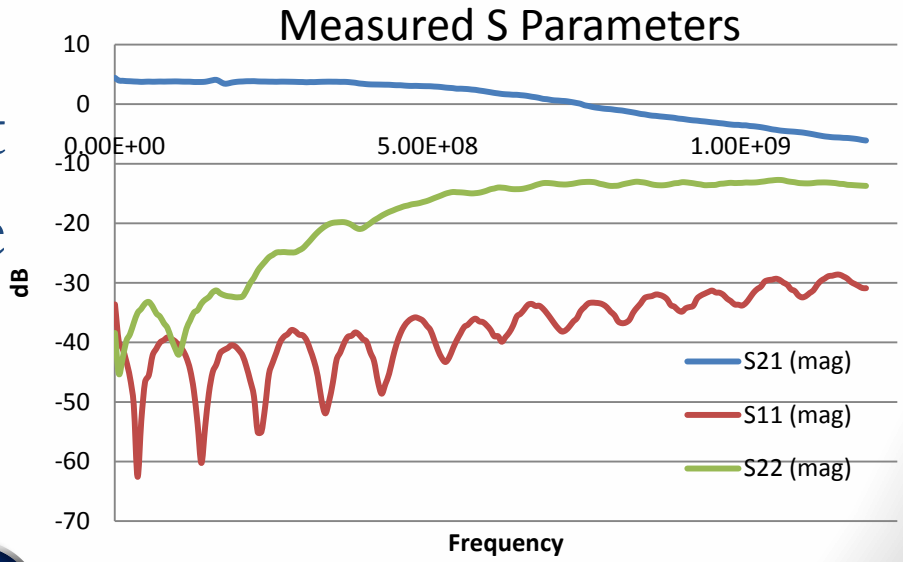

TIA Amplifier Comparison

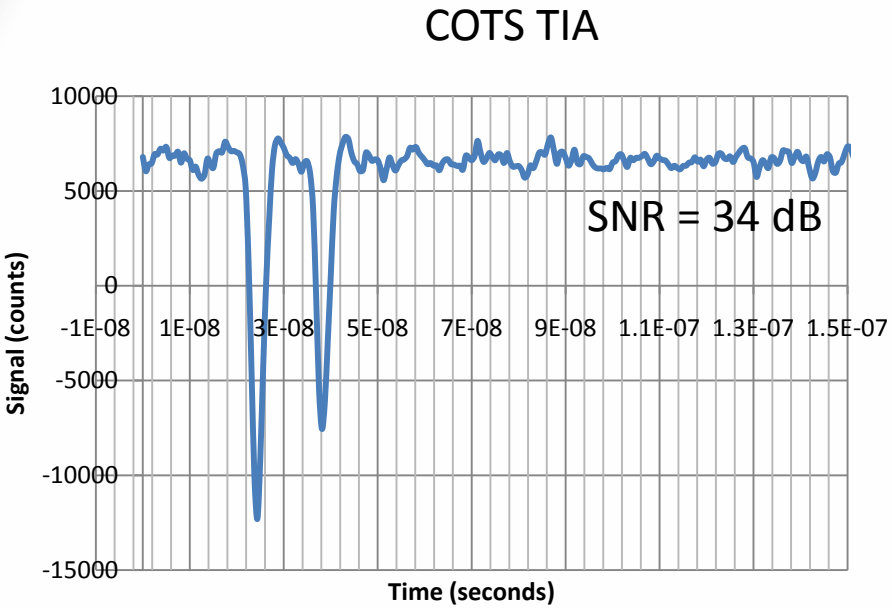

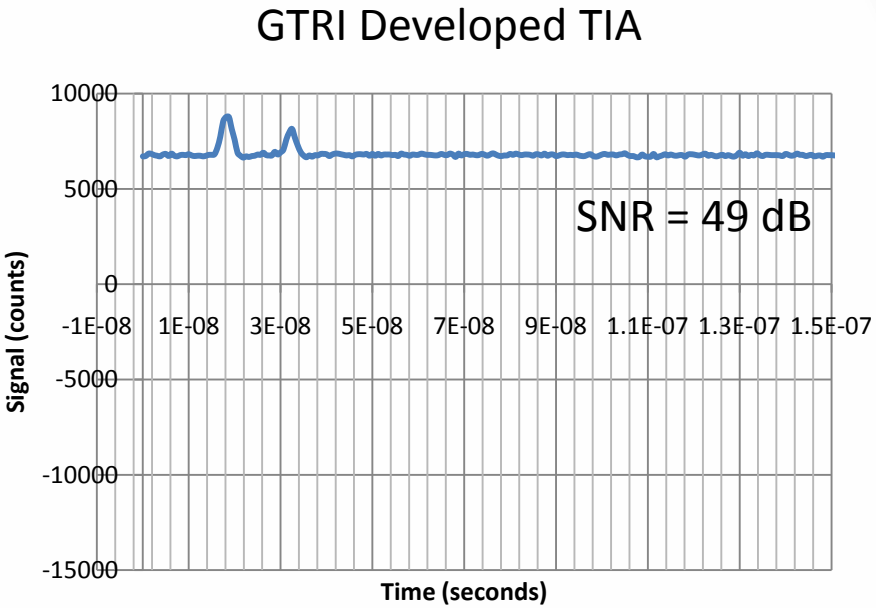

- Licel R9880u PMT
- Identical optical path, detector, and ADC

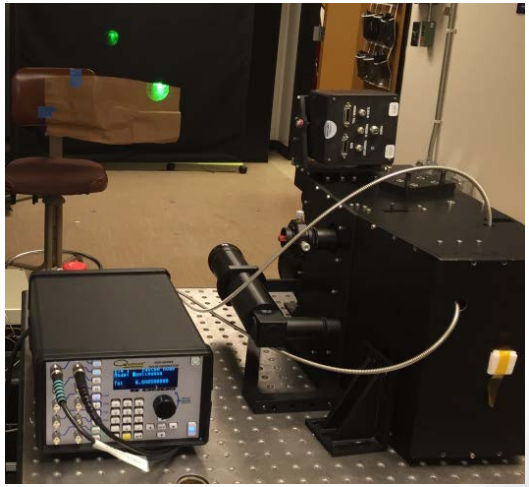

DC-coupled, Differential TIA

Source follower

50 Ω Output Buffer

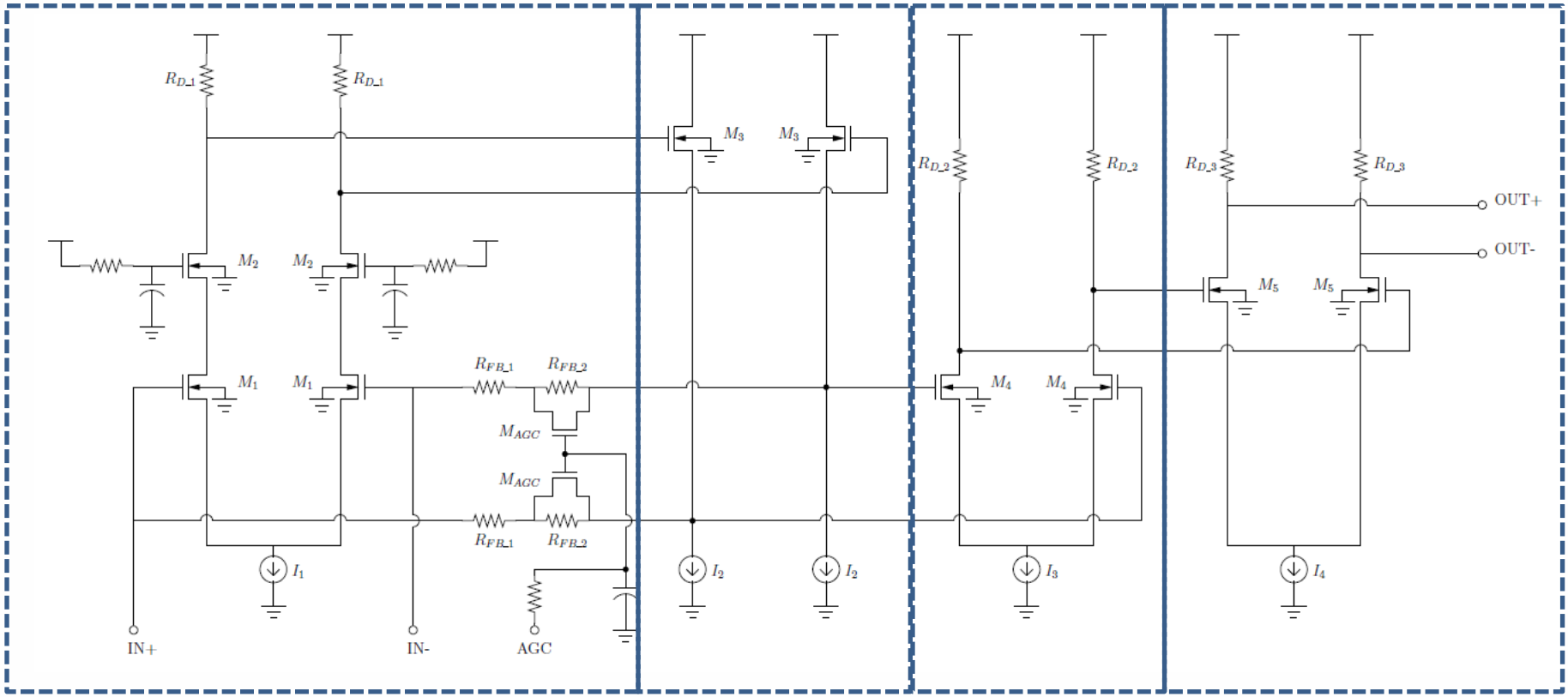

Cascode TIA with differential inputs

Secondary gain stage

LaFevre, K. "Design of a Modified Cherry-Hooper Transimpedance Amplifier with DC Offset Cancellation," Masters Thesis, Arizona State University, August 2011.

Conclusions

- Receiver architectures have a large variety of parameters
- All pieces of the receive chain must be designed in tandem to accomplish these requirements
- Tradeoffs must be carefully weighed
- Measurement and modeling of individual components into a system-level model is critical

QUESTIONS?

chris.valenta@gtri.gatech.edu